CCE 16/2X CHIMNEY

ALUMINIUM FILTER

HALOGEN LAMP

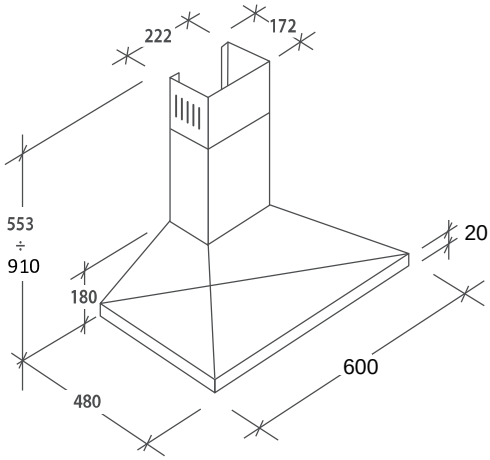

CHIMNEY HOOD 60CM

- Mechanical Push Buttons
- 3 Speed Levels
- Max Suction power 290 m³/h
- 2x28W Halogen lamps
- Motor Power 65W
- 2 Aluminum cassette Grease filters
- Carbon Filter
- Min. Speed noise 63 dB(A)
- Recirculating / Ducted mode
- Total Power 121W
- Inox

36900443 CCE16/2X

Model	**CCE16/2X**
Product code	**36900443**
EAN code	8016361854840
Brand	CANDY
Type of Hood	CHIMNEY 60
Dimensions (cm)	60cm
Finish/Color	Inox
Voltage	220-240 V
Frequency	50/60 Hz
Motor (number x power)	1 x 65 W
Lighting (number x power - type)	2X28W Candle Halogen Lamp
Total power	121W
Controls	Mechanical push buttons
Speed levels	3
RU - Noise level (dB)	63
Max air flow in normal use QMAX (m3/h)	290.1
Air flow at intensive/boost setting QBOOST (m3/h)	-
A-weighted Sound Power Emission EN60704 at minimum speed DBMIN (dBa)	58
Filters antigrease (number x type)	2 Aluminium cassette
Carbon filters (code / description / pcs x pack)	35900287 FCR 7/1 2 pcsx1 pack
Carbon filters (included / optionol)	Included
Timer (included / minutes)	-
Filter saturation	-
Special function (clean air)	-
No return valve	Yes
Air outlet (mm)	150
Reduction (mm)	120mm adaptor
Wire lenght	1,50 mtr
Plug type	No
Product dimensions (mm) (WxDxH)	600*480*553 (910)
Packaging dimensions (mm) (WxDxH)	650*245*540
Net weight (kg)	6.3
Gross weight (kg)	7.8